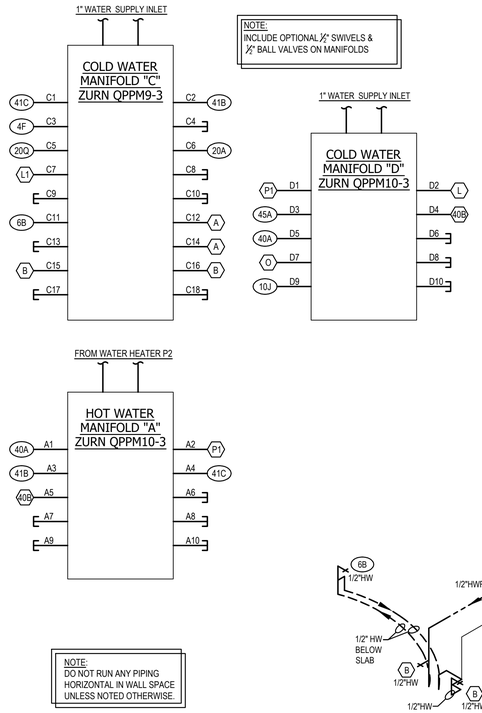

NOTE:
INCLUDE OPTIONAL ½" SWIVELS & ½" BALL VALVES ON MANIFOLDS

NOTE:
DO NOT RUN ANY PIPING HORIZONTAL IN WALL SPACE UNLESS NOTED OTHERWISE.

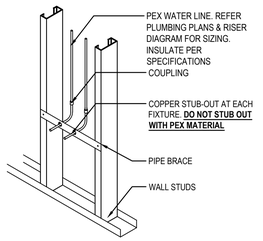

PEX STUB OUT DIAGRAM

NOTE:
PROPERLY STRAP LINES AND PROVIDE PROTECTIVE GROMMETS WHEN RUNNING THROUGH METAL STUDS

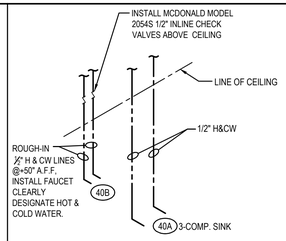

CHEMICAL FEED SYSTEM PIPING DIAGRAM

NOTE:
G.C. SHALL VERIFY WITH LOCAL JURISDICTION ON REQUIRED METHOD OF CHEMICAL SYSTEM INSTALLATION AS SHOWN ABOVE. IF THE ABOVE DETAIL IS NOT ALLOWED BY LOCAL JURISDICTION, THEN THE SYSTEM SHALL BE INSTALLED IN-LINE/INTERGRATED INTO 3 COMPARTMENT SINK.

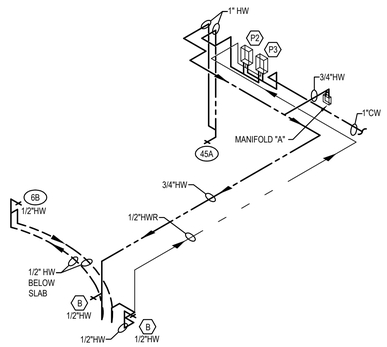

HAND SINK/LAVATORY HOT WATER LOOP

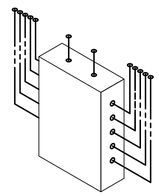

MANIFOLD INSTALL DIAGRAM

NOTE:
IN ROOM WHERE PEX MANIFOLD IS LOCATED, PEX LINES AND MANIFOLD SHALL BE SURFACE MOUNTED TO WALL BELOW LAY-IN CEILING.

WATER RISER DIAGRAM | 11
NO SCALE | P-400

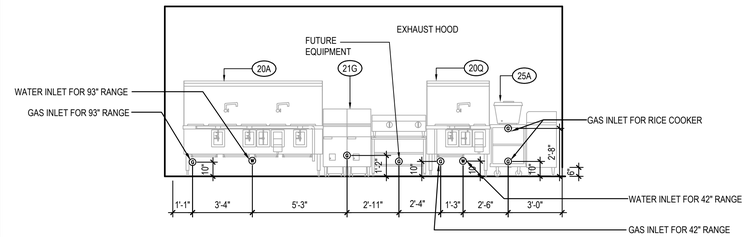

GAS COOKLINE ELEVATION | 4
NO SCALE | P-400

GAS EQUIPMENT SCHEDULE

ITEM	QTY	EQUIPMENT	MBH EACH	CFH EACH	CFH TOTAL
P2 P3	2	WATER HEATER	199.9	199.9	399.8
20A	1	CHINESE RANGE	450	450	450
20Q	1	CHINESE RANGE	190	190	190
21B	2	DEEP FRYER	122	122	244
FUTURE EQUIP	1	-	81	81	81
25A	2	RICE COOKER	35	35	70
RTU-1,2	2	AIR CONDITIONER	180	180	360
MAU-1	1	MAKE-UP AIR	309	309	309
TOTAL					2,104

LOW PRESSURE NATURAL GAS CALCULATION:
SIZED PER 2015 VFGC TABLE 402.4(2)

TOTAL DEVELOPED LENGTH: 100'

TOTAL LOAD: 2,104 CFH

NOTE:
DO NOT RUN ANY PIPING HORIZONTAL IN WALL SPACE.

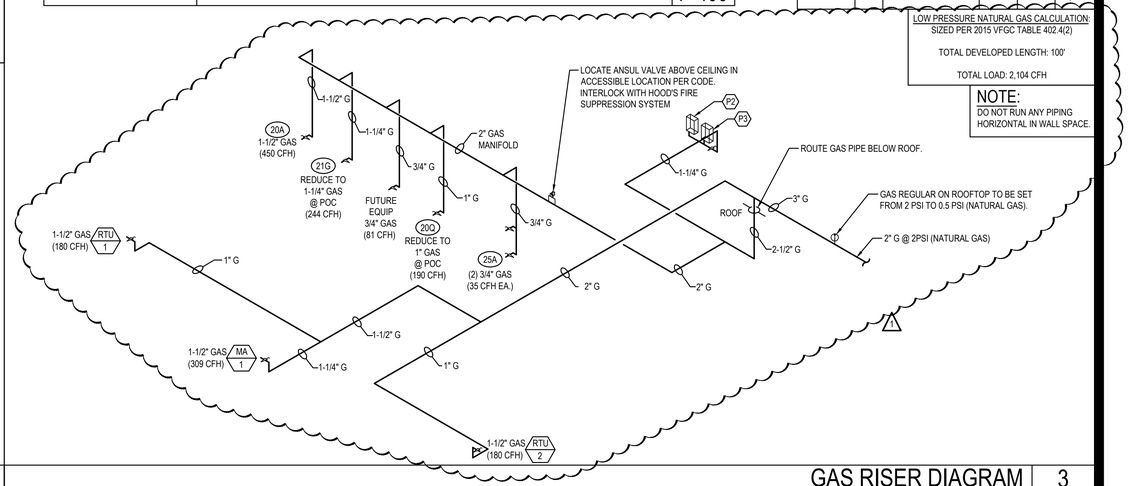

GAS RISER DIAGRAM | 3
NO SCALE | P-400

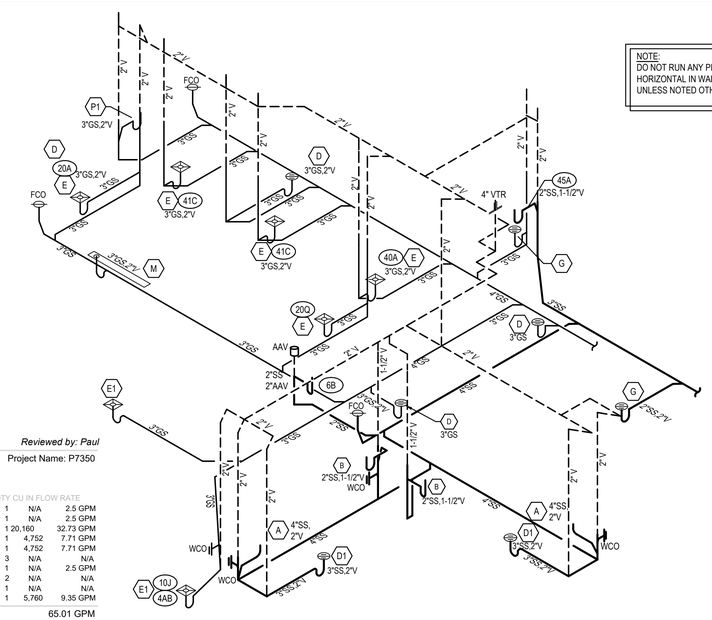

NOTE:
DO NOT RUN ANY PIPING HORIZONTAL IN WALL SPACE UNLESS NOTED OTHERWISE

GREASE INTERCEPTOR CALCULATIONS — *Reviewed by: Paul*

Reference No. 20802 — Project Name: P7350

Step 1: Flow rate to grease interceptor

Fixture flow rate: (cu in / 231) = gal x 0.75 / 2 min = 2 min flow rate

NAME	TYPE	DIMENSIONS	QTY	CU IN	FLOW RATE
20A	Floor Sink	N/A	1	N/A	2.5 GPM
20Q	Floor Sink	N/A	1	N/A	2.5 GPM
40A	3 Compartment Sink	24" x 20" x 14" (3)	1	20,160	32.73 GPM
41B	Prep Sink One Bowl	18" x 24" x 11"	1	4,752	7.71 GPM
41C	Prep Sink One Bowl	18" x 24" x 11"	1	4,752	7.71 GPM
D	Floor Drain	N/A	3	N/A	N/A
E1	Floor Sink	N/A	1	N/A	2.5 GPM
G	Floor Drain	N/A	2	N/A	N/A
M	Floor Drain	N/A	1	N/A	N/A
P1	Mop Basin	24" x 24" x 10"	1	5,760	9.35 GPM
Total					65.01 GPM

Step 2: Grease Production

Number of Seats x 4 turns per seat x Grease Production Value x Days between pump-out = Grease output

Number of seats in facility: 64
Grease production value: 0.035 lbs per serving (Chinese: High / No flatware)
Days between pump-outs: 90 days

64 x 4 x 0.035 x 90 = 537.6 lbs of FOG

SCHIER MODEL	Description: Polyethylene Grease Interceptor Dimensions: Length: 87", Width: 33", Height: 44" Flow Rates/Grease Capacities: 100 GPM / 1895.0 lbs Liquid Capacity: 277 gal
GB-250	

WASTE AND VENT RISER DIAGRAM | 9
NO SCALE | P-400

NOTE:
ALL PLUMBING LINES TO PENETRATE WALL **6" BELOW** CEILING (TYPICAL)

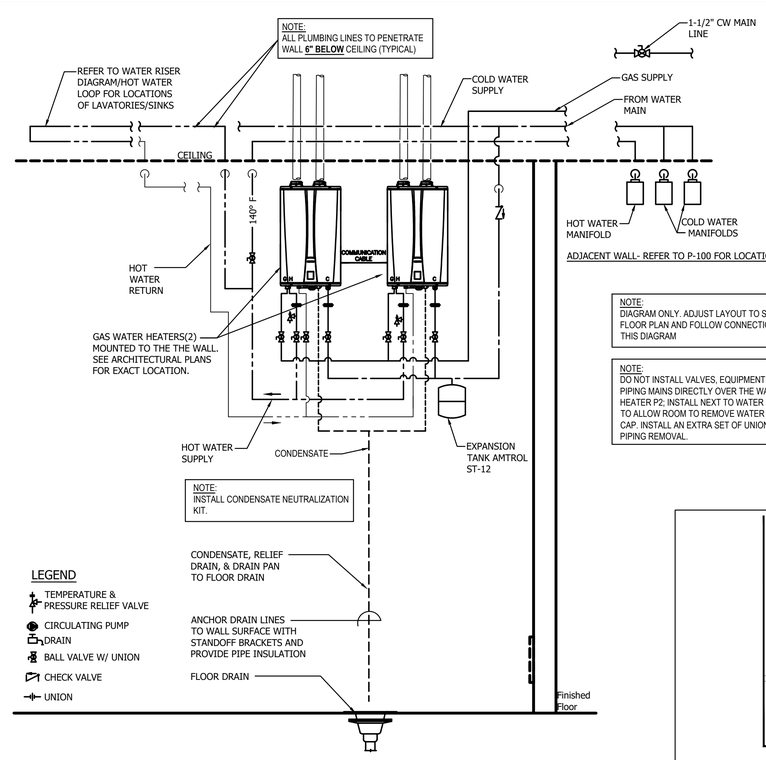

EQUIPMENT: REFER TO PLUMBING EQUIPMENT SCHEDULE ON SHEET P-101

P2 GAS WATER HEATER

P3 GAS WATER HEATER

NOTES:
1. PREFERRED PIPING DIAGRAM. THE TEMPERATURE AND PRESSURE RELIEF VALVE SETTING
2. SHALL NOT EXCEED PRESSURE RATING OF ANY COMPONENT IN THE SYSTEM.
3. SERVICE VALVES ARE SHOWN FOR SERVICING UNIT. HOWEVER, LOCAL CODES SHALL GOVERN THEIR USAGE.
4. REF. TO DETAIL 13/P-500 FOR ALL LINES TO BE INSULATED.

WARNING: THIS DRAWING SHOWS SUGGESTED PIPING CONFIGURATION AND OTHER DEVICES; CHECK WITH LOCAL CODES AND ORDINANCES FOR ADDITIONAL REQUIREMENTS.

NOTE:
DIAGRAM ONLY. ADJUST LAYOUT TO SPECIFIC FLOOR PLAN AND FOLLOW CONNECTIONS PER THIS DIAGRAM

NOTE:
DO NOT INSTALL VALVES, EQUIPMENT OR PIPING MAINS DIRECTLY OVER THE WATER HEATER P2; INSTALL NEXT TO WATER HEATER TO ALLOW ROOM TO REMOVE WATER HEATER CAP. INSTALL AN EXTRA SET OF UNIONS FOR PIPING REMOVAL.

NOTE:
ALL WATER PIPES IN EXPOSED AREAS OUTSIDE WALLS AND BELOW CEILING MUST BE COPPER UNLESS NOTED OTHERWISE.

NOTE:
ALL VENT PIPING SERVING WATER HEATER SHALL TRANSITION TO 3" IMMEDIATELY AFTER CONNECTION. ROUTE PIPING STRAIGHT UP THROUGH THE CEILING TO THE ROOF. AVOID UNNECESSARY BENDS. AVOID RUNNING WATER PIPING DIRECTLY ABOVE WATER HEATER TO AVOID DAMAGE TO WATER HEATER CAUSED BY POSSIBLE LEAKS.

HOT WATER SYSTEM DIAGRAM | 5
NO SCALE | P-400

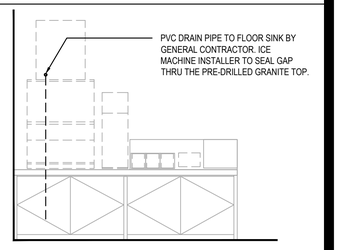

DRINK STATION PLUMBING | 1
NO SCALE | P-400

PANDA RESTAURANT GROUP INC.
1683 Walnut Grove Ave.
Rosemead, California
91770
Telephone: 626.799.9898
Facsimile: 626.372.8288

All ideas, designs, arrangement and plans indicated or represented by this drawing are the property of Panda Express Inc. and were created for use on this specific project. None of these ideas, designs, arrangements or plans may be used by or disclosed to any person, firm, or corporation without the written permission of Panda Express Inc.

REVISIONS:

1	COMMENTS/OWNER REV	04-07-21

ISSUE DATE:

1	CHECK SET	10-23-20
2	PERMIT SET	03-15-21
3	BID SET	04-02-21

DRAWN BY:

PANDA PROJECT #: S4-21-D7864
ARCH PROJECT #: P7350

cph
www.cphcorp.com
A Full Service A & E Firm
Plans Prepared By
CPH Design, Inc.
500 West Fulton St.
Sanford, Fl. 32771
Ph: 407.322.6841
State of Virginia Licenses:
Engineer No. 407006317
Surveyor No. N/A
Architect No. 407006317
Landscape No. 407006317

PANDA EXPRESS

END CAP - TENANT BUILD OUT
4501 S LABURNUM AVE
RICHMOND VA, 23231

P-400

WATER, GAS, WASTE & VENT RISER DIAGRAMS